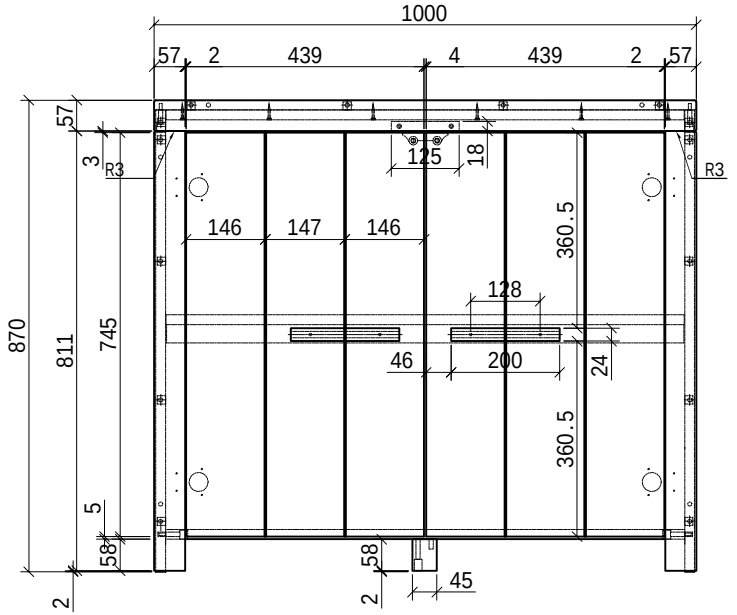

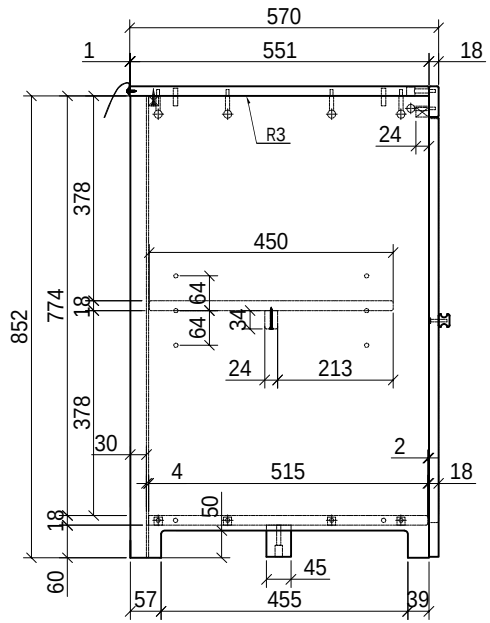

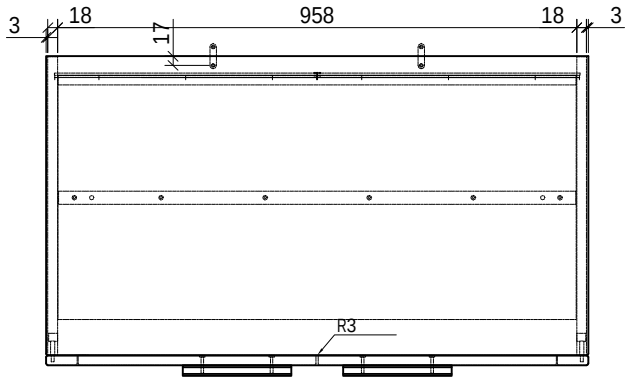

All contents on this document are protected by copyright & patents. Except as specifically permitted herein, no portion of the information on this document may be reproduced in any form, or by any means, without prior written permission from Vipack bvba. No parts of the designs and the products can be copied or transmitted. Product and drawings under Patent and Copyright

COPYRIGHT © 2018 VIPACK, ALL RIGHTS RESERVED

ERKO1214

VIPACK FURNITURE