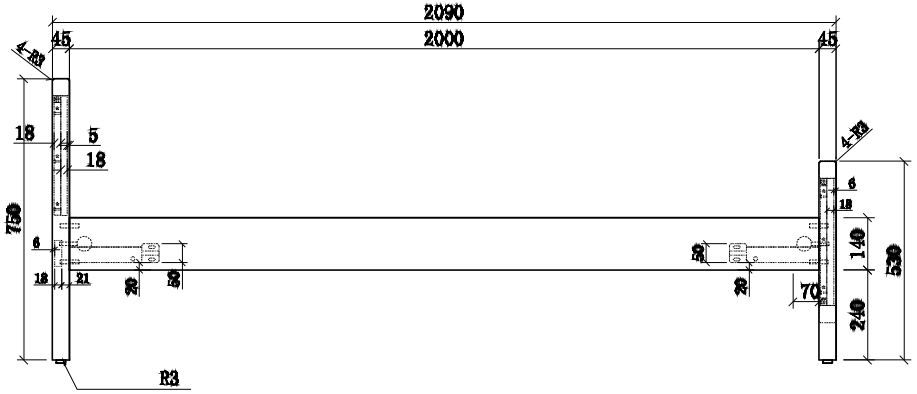

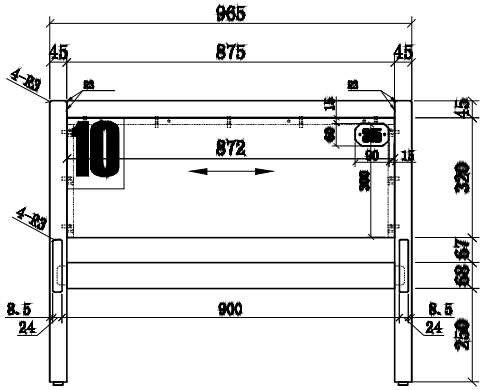

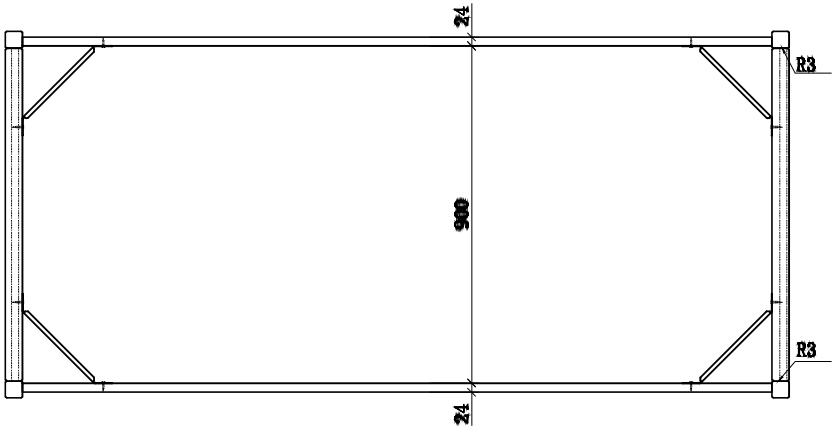

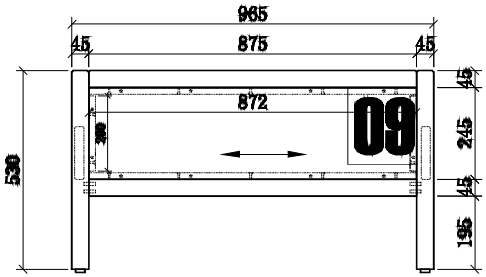

COPYRIGHT© 2021 VIPACK, ALL RIGHTS RESERVED

All contents on this document are protected by copyright & patents. Except as specifically permitted herein, no portion of the information on this document may be reproduced in any form, or by any means, without prior written permission from Vipack bvba. No parts of the designs and the products can be copied or transmitted. Product and drawings under Patent and Copyright

AXBE9019

VIPACK FURNITURE

Deken Debostraat 70a B-8791 Beveren-Leie

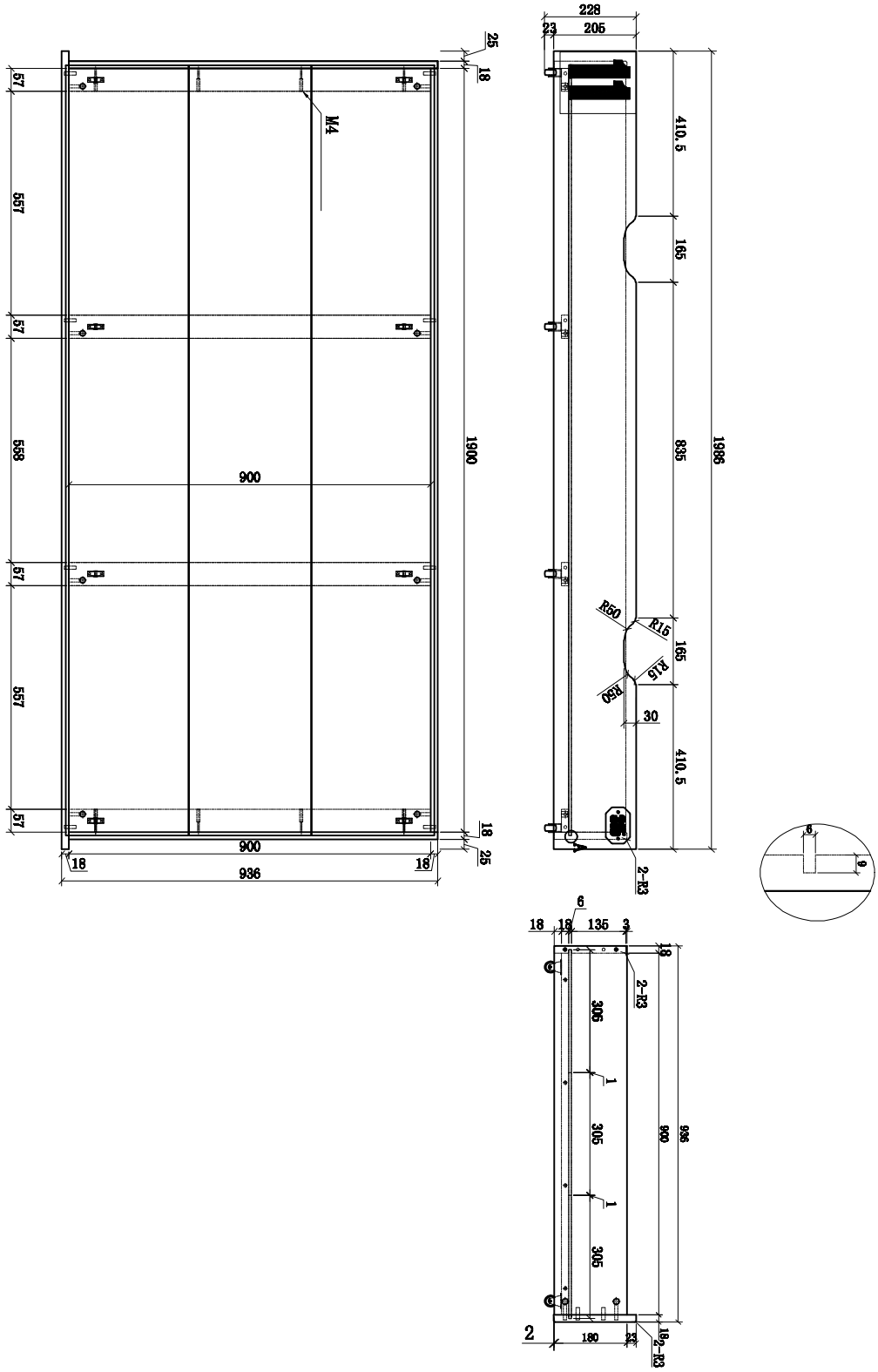

COPYRIGHT© 2021 VIPACK, ALL RIGHTS RESERVED

All contents on this document are protected by copyright & patents. Except as specifically permitted herein, no portion of the information on this document may be reproduced in any form, or by any means, without prior written permission from Vipack bvba. No parts of the designs and the products can be copied or transmitted. Product and drawings under Patent and Copyright

AXRB9019

VIPACK FURNITURE

Deken Debostraat 70a B-8791 Beveren-Leie

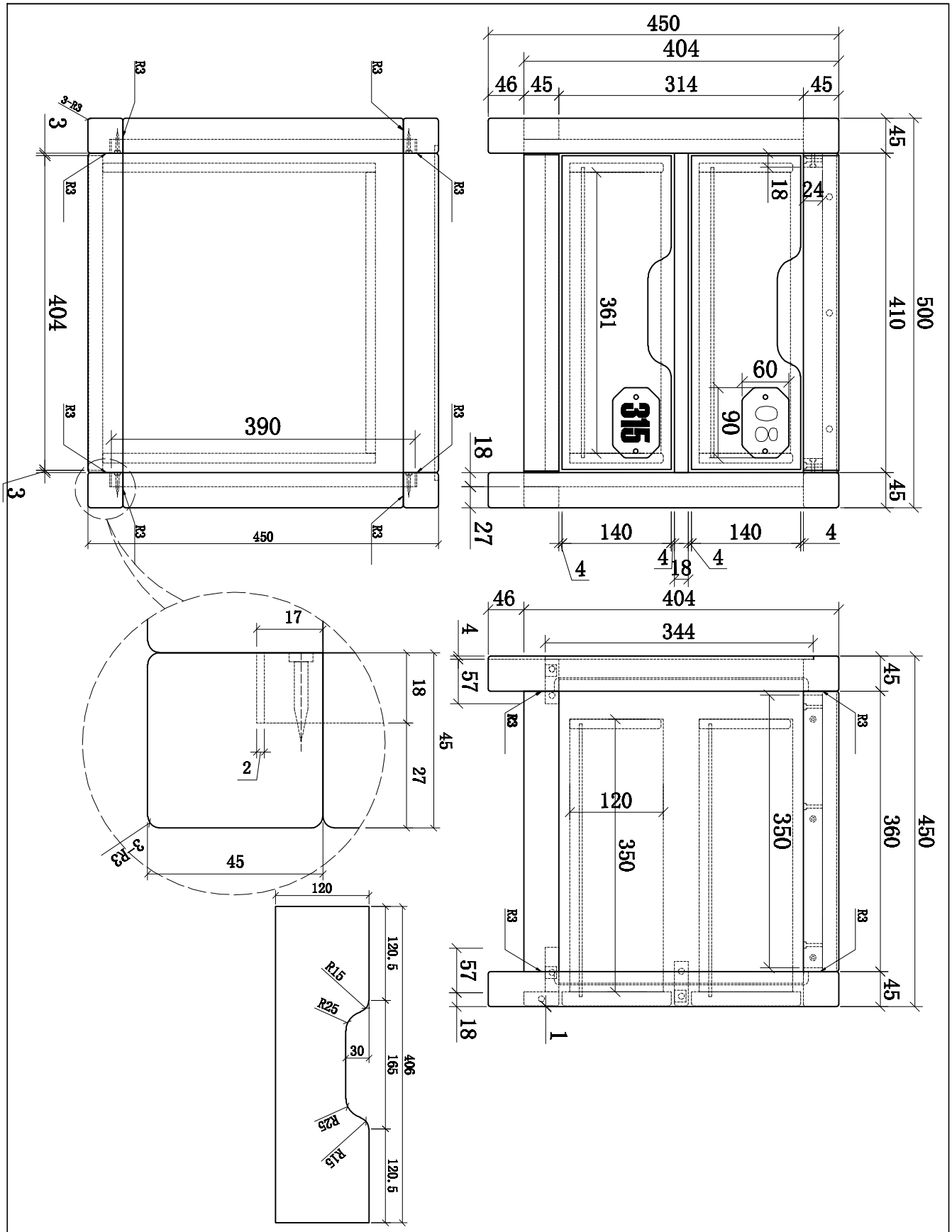

COPYRIGHT© 2021 VIPACK, ALL RIGHTS RESERVED

All contents on this document are protected by copyright & patents. Except as specifically permitted herein, no portion of the information on this document may be reproduced in any form, or by any means, without prior written permission from Vipack bvba. No parts of the designs and the products can be copied or transmitted. Product and drawings under Patent and Copyright

AXNA2219

VIPACK FURNITURE
Deken Debostraat 70a B-8791 Beveren-Leie

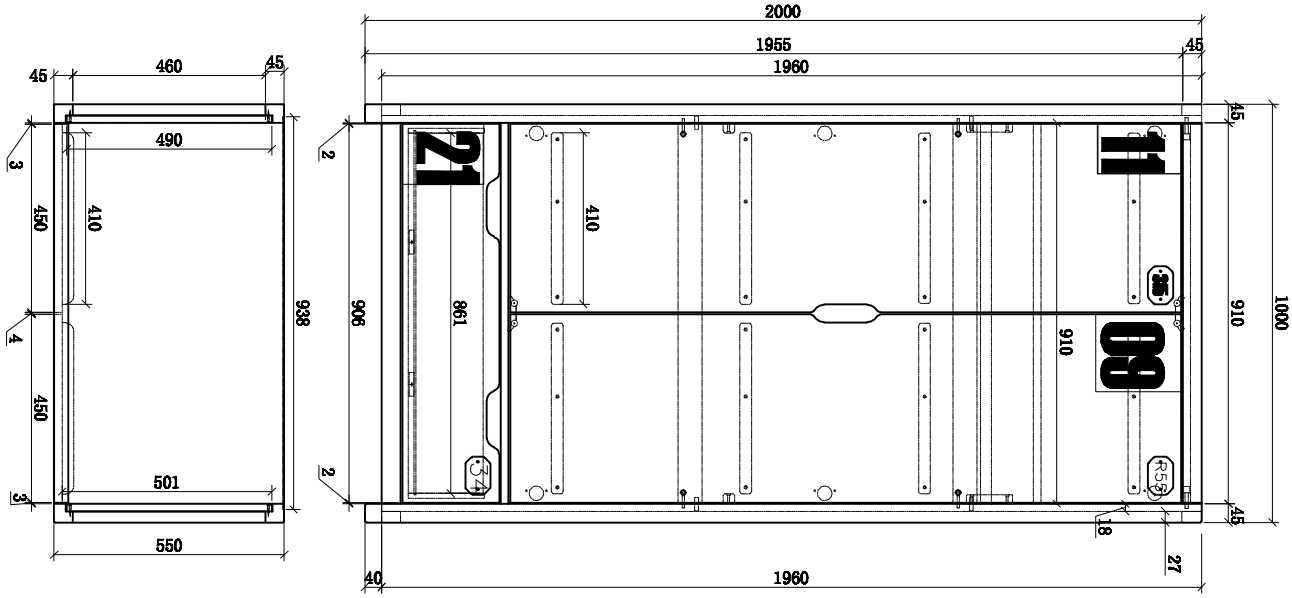

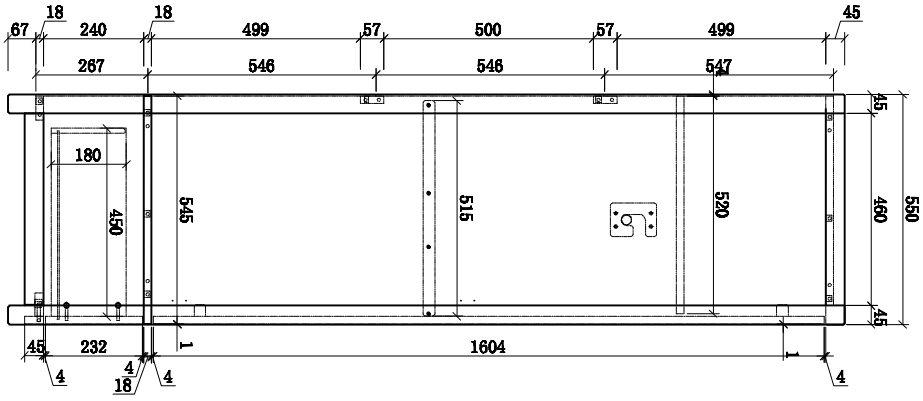

COPYRIGHT© 2018 VIPACK, ALL RIGHTS RESERVED

All contents on this document are protected by copyright & patents. Except as specifically permitted herein, no portion of the information on this document may be reproduced in any form, or by any means, without prior written permission from Vipack bvba. No parts of the designs and the products can be copied or transmitted. Product and drawings under Patent and Copyright

AXKL1219

VIPACK FURNITURE
Deken Debostraat 70a B-8791 Beveren-Leie

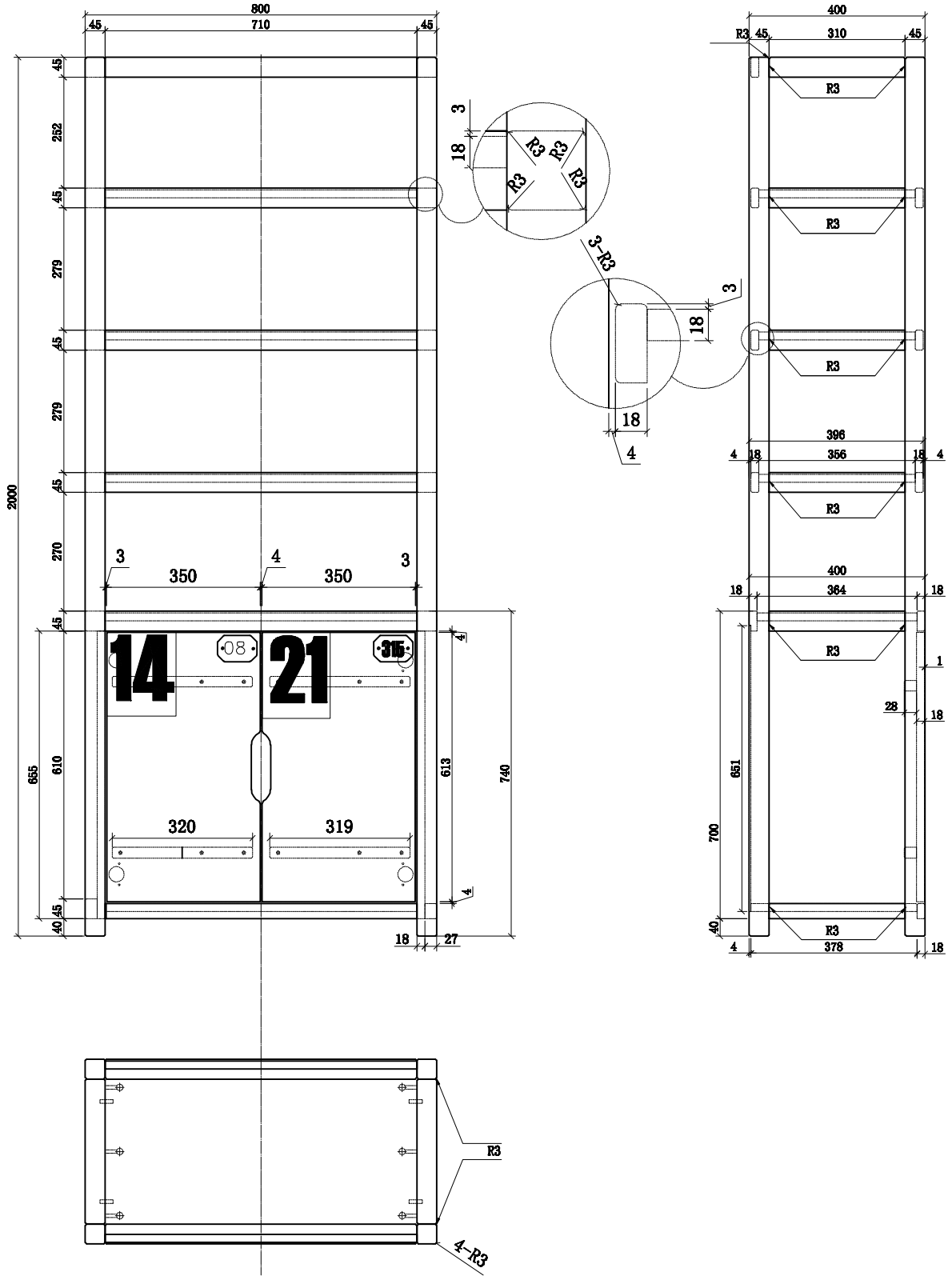

COPYRIGHT© 2021 VIPACK, ALL RIGHTS RESERVED

All contents on this document are protected by copyright & patents. Except as specifically permitted herein, no portion of the information on this document may be reproduced in any form, or by any means, without prior written permission from Vipack bvba. No parts of the designs and the products can be copied or transmitted. Product and drawings under Patent and Copyright

AXBI2219

VIPACK FURNITURE
Deken Debostraat 70a B-8791 Beveren-Leie