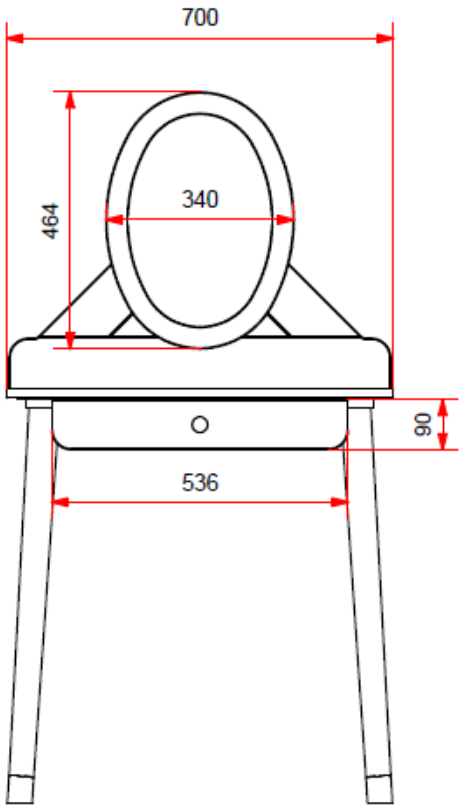

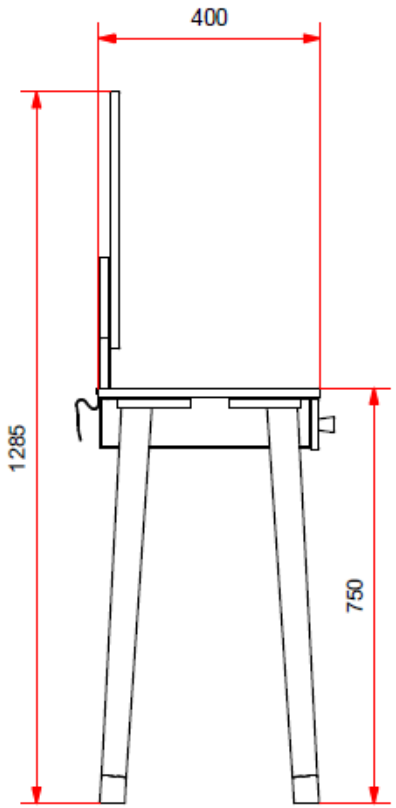

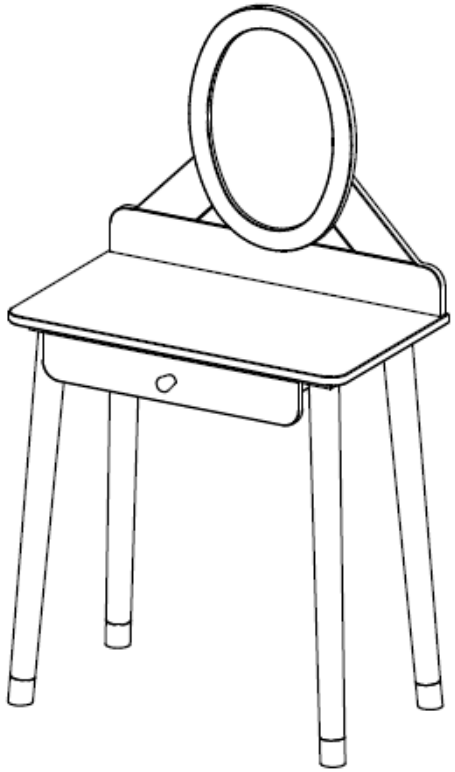

L: 700mm H: 1285mm D: 400mm

MODEL: BILLY BIDT7014

DATE: 02/04/2020

COPYRIGHT © 2020 VIPACK, ALL RIGHTS RESERVED

All contents on this document are protected by copyright & patents. Except as specifically permitted herein, no portion of the information on this document may be reproduced in any form, or by any means, without prior written permission from Vipack bvba. No parts of the designs and the products can be copied or transmitted. Product and drawings under Patent and Copyright.

VIPACK FURNITURE